# A Piecewise-Focusing (PWF) solar collector for photothermal materials processing

David K Bisset
david.bisset@pwfcollector.au

## Abstract

The PWF solar collector, which was conceived as a source for CST electricity with thermal storage or for industrial heat via suitable heat transfer fluids, is redesigned to be more suitable for direct photothermal processing of materials at high temperatures. The principal change is to bring the receiver down close to ground level for greater convenience of materials handling. The implications of this change for optical design are explored via the example of a 4000 $m^2$ PWF collector that can deliver about 2 MW of concentrated sunlight to an active processing zone, at an average concentration of 1.3 $MW/m^2$. Concentration can be increased by several means if required.

## Introduction

Point-focus concentrating solar collectors can achieve sunlight intensities of several thousand suns at their focal points, resulting in surface temperatures of 1500–2000 Celsius or more. However, the most common application for concentrating solar thermal (CST) collectors is for electricity generation with thermal storage. Second generation systems based on steam-Rankine power blocks and molten salts for heat transfer and storage are limited to less than 600 C, and Gen3 systems based on $CO_2$ turbines will go to 700–800 C [1]. Concentration intensities are of order 600–900 suns, and must be carefully managed to avoid overheated hotspots.

A few CST systems with higher concentrations have been constructed primarily for research purposes, perhaps the best-known being the Odeillo solar furnace in the French Pyrenees that can achieve 1500–3500 C at its focus.[2] Various major industrial processes such as calcination and sintering utilize such temperatures,[3] but they usually need to operate 24 hours/day, thereby rendering solar sources unsuitable. Researchers at UCLA [4] are developing a process that should be suitable for batch operation driven by high-intensity CST, i.e. the photothermal dissociation of methane into hydrogen gas and battery-grade crystalline graphite. They speculate that high-intensity light (and not simply the high temperature) greatly accelerates the methane dissociation and the deposition of graphite onto a substrate, as occurred in their experiments. Benamar et al [5] are developing solar pyrometallurgy at 1100 C for recycling lithium-ion batteries, with particular interest in the remarkably high (>99%) recovery of cobalt in their process.

Piecewise-focusing (PWF) solar collectors with thermal storage have been proposed for electricity production [6,7], and one of their key features is the use of cavity receivers. It was shown that a concentration ratio of 2000 at the receiver entrance is readily achievable. This concentration could be applied to a reaction zone for materials processing. The most efficient receiver position is perpendicularly above the centre of the PWF reflector array, as shown on the left in Figure 1, but this position (more than 50 metres above ground level in the following example designs) may be rather awkward for batch processing of materials. Therefore, the present aim is to investigate the optical performance of a PWF collector where the receiver is positioned close to ground level, as also shown in Figure 1. The receiver design will incorporate an active processing zone at the focus.

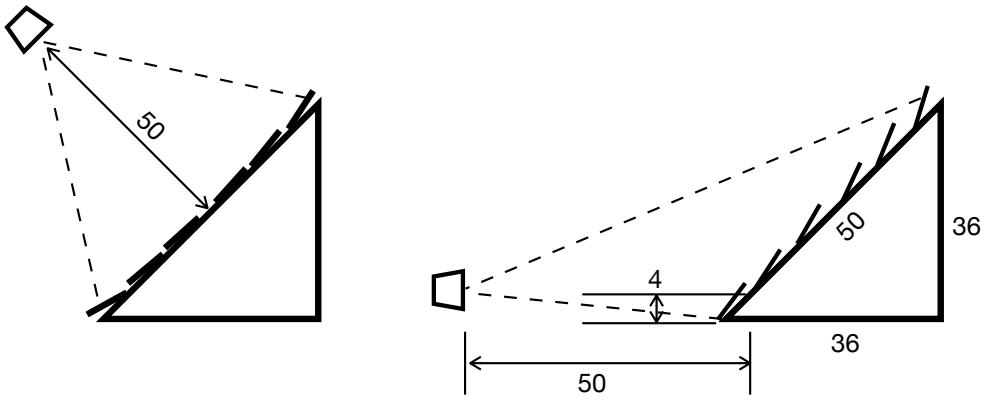


Figure 1. Side views of PWF collectors for CST power (left; see [8] for more details) and concentrating solar photothermal materials processing (right). Dimensions in metres. The centre of the materials processing receiver is 4 m above ground level.

There will be tradeoffs between collection efficiency (critical for power generation) and concentrated sunlight uniformity, intensity, and controllability (essential for production of high-value product). Note that although the reflector array and the receiver must be synchronized to rotate about a common vertical axis to follow the sun azimuthally, they do not need to be physically connected.

## Collector design

The front face of the collector with its tiered array of reflectors is nominally 100 x 50 metres, but the active width is reduced towards the bottom, which is closer to the receiver — see Figure 2. The gross active area is 4000 m$^2$ and the total reflector area is 3000 m$^2$ allowing for gaps between reflectors. Since astigmatism will be more serious in this design, a larger number (375) of smaller reflectors are used; they are chosen to be circular rather than hexagonal, of radius 1.6 m (area 8.04 m$^2$). Twelve spherically-curved reflectors are used in the following numerical simulations: six at the extremities of the array (A–C, A'–C'), and the other six placed halfway in towards the centreline (Figure 2). Spherical curvature of the reflectors is adjusted so that the edges slope inwards by 0.45 to 0.9 degrees, depending on distance from the focal plane. Assuming that a geometrical

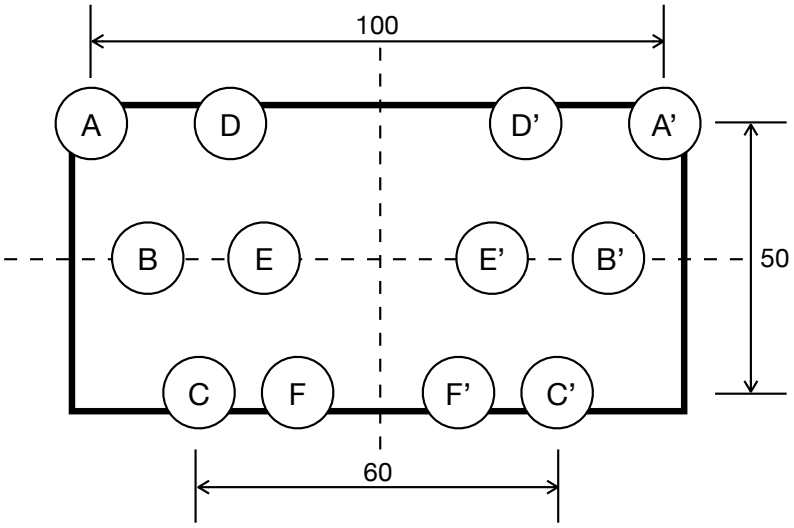


Figure 2. The front face of the collector (dimensions in metres), showing positions of the twelve reflectors used for numerical simulations.

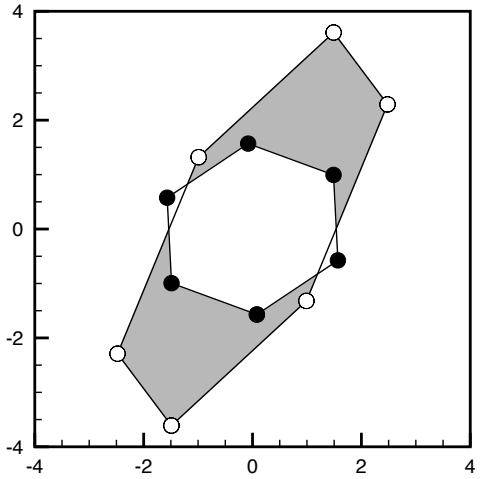


Figure 3. Comparison of images from reflector A formed on vertical (black dots) and sloping targets. The reflector is given an extremely large radius of curvature for this test, and the sun is a point source at 15 degrees elevation. The sloping target is parallel to the collector front face. Axis scales in metres.

concentration ratio of 2000 is suitable, the active focal area is 1.5 $m^2$, taken to be 1.67 x 0.9 m (width x height). Allowing for cosine factors and reflectivity losses, around 2 MW of concentrated sunlight will be delivered to this area (average 1.3 $MW/m^2$). Transmission losses through a possible quartz window (or similar) in front of the reaction zone are unknown.

The principal feature of PWF collectors that allows for robust and economical construction is that the individual reflectors tilt around single nearly-horizontal axes in order to track the sun in elevation. Three particular sun elevations are selected in order to calculate the direction of the mounting axis for any given reflector [7]; elevations of 15, 45, and 75 degrees are used for all reflectors in the present work. Reflectors will be perfectly aimed at these sun elevations only. In previous designs for CST power the issue of imperfect aim was always minor compared to astigmatism [7,8], but it turns out to be significant in the present case, as will be shown.

Another issue is the angle of the focal area relative to the front face of the collector. In previous work they have been assumed parallel, but the focal plane is set vertically in the present case. The targeting program was modified accordingly, and a comparison test is shown in Figure 3 for the upper-left reflector (label A in Figure 2). Here the sun is treated as a pure point source 15 degrees above the horizon and the reflector is virtually flat. Rays are reflected from six points on the edges of the circular reflector (or from the vertices of a hexagon). In practice the focal plane could be tilted somewhat beyond vertical, if beneficial for materials processing.

## Results and discussion

For the following results, reflectors A and A' are given spherical curvature such that their edges slope inwards by 0.45 degrees (26 mrad), resulting in a much tighter focal area than shown in Figure 3, and the other reflectors are spherically curved in accordance with their distances from the target plane. The finite size of the sun (about 9 mrad apparent diameter) is accounted for in the following images by replacing discrete points with circles of diameter 0.5 to 0.8 metres, roughly equivalent to 9 mrad diameter viewed from the corresponding reflector.

Figure 4 shows images formed on the focal plane by the twelve reflectors at six different sun elevations. The dashed outline indicates the desired active area. Ideally this area would be

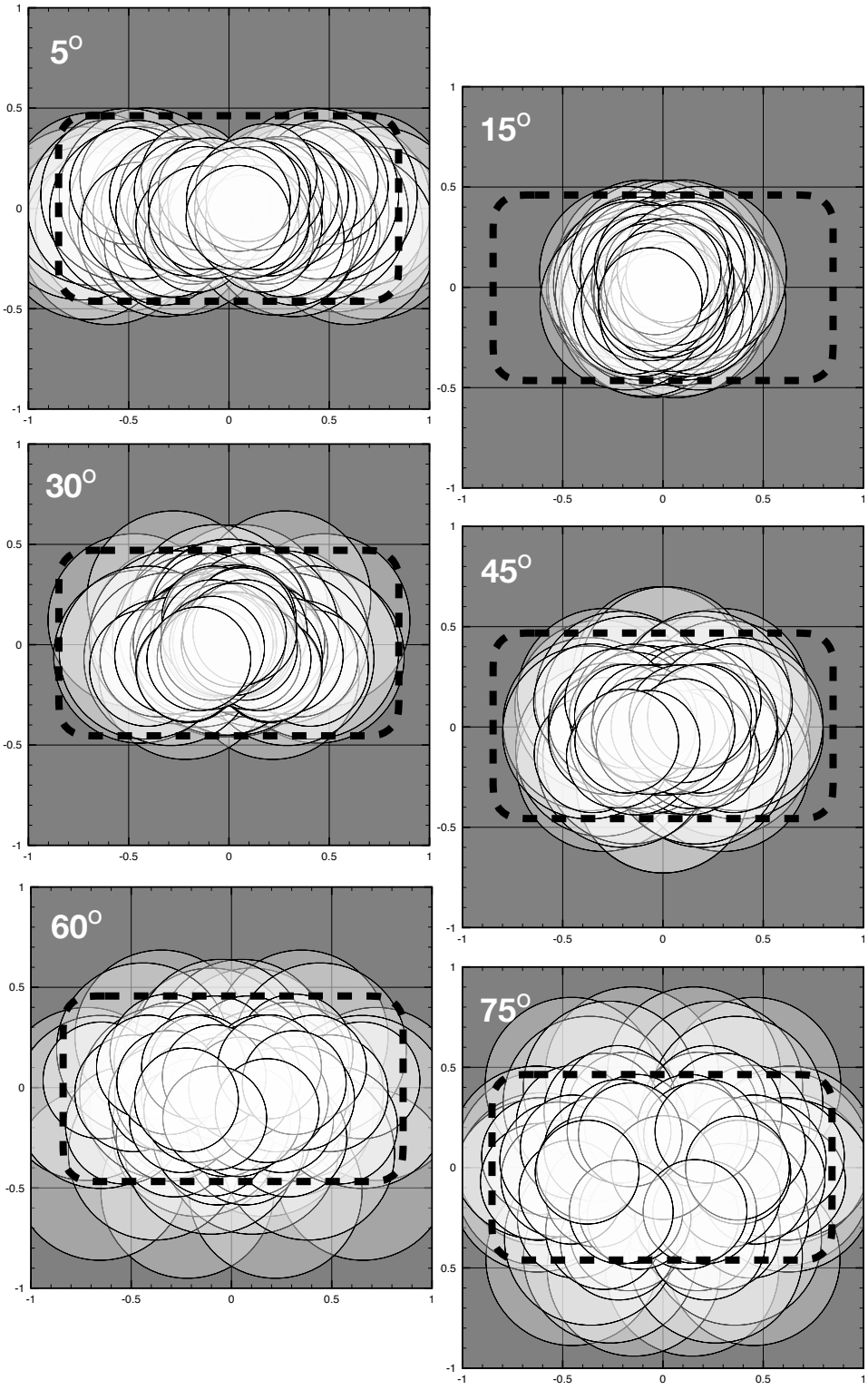


Figure 4. Images formed on the target focal plane at the indicated sun elevations, with the desired active area outlined. Each circle represents the reflected sunlight from one of six points evenly spaced around the edges of the 12 reflectors, or their centrepoints, with diameter adjusted to subtend 9 mrad at the reflector.

illuminated fairly uniformly at all times with not much spill outside it, but there cannot be a really sharp intensity cutoff at the edge of the area and therefore some spillage must be tolerated. Clearly there is spillage at the higher sun elevations in Figure 4, but it's not as serious as might first appear. Firstly, only points on the outer edges of the reflectors are used in the figure, and reflections from all other areas are better aimed. Secondly, much of the spillage comes from a few 'worst case' reflectors, especially A and A' at the upper corners of the collector face — details in the Appendix.

The question of uniformity is more serious. Intensity can be made more uniform vertically by slightly raising or lowering the aim points of some of the reflectors at different times of the day, at the cost of greater spillage. However, intensity across the width of the active area must be dealt with at the design stage. The images on the right of Figure 4 correspond to the sun elevations that were used for determining collector axis mounting directions, so image spread horizontally is caused by astigmatism only, and the focus is too concentrated. The focus point for each reflector moves left or right at other elevations such as those on the left of Figure 4 — see the Appendix for examples. Intensity can be made more uniform at all sun elevations by (a) using different triples of sun elevations when determining the mounting axes for different reflectors, and (b) setting a range of slightly different aim points. Also, if greater average intensity is required, the active zone can be made smaller, although spillage will increase.

Both intensity and uniformity of illumination can be improved by using secondary concentrators, such as a modified version of the conical concentrator adopted by Abuseada and Fisher [9]. Sunlight that would otherwise be spilt is redirected onto the active focus area. A secondary reflector also mitigates to some extent the reflector aiming issues mentioned above, and permits a smaller focus area with higher intensity if wanted. Note also that raising the processing zone higher above ground (from 4 to 20 m in Figure 1, for example) would allow for improved optical performance of the collector, if acceptable for process materials handling.

PWF collectors of the general type described above could be investigated for many different high-temperature industrial processes, especially where “a strong photothermal catalytic effect from the concentrated light source that enhances chemical kinetic rates” [4] is found to operate. Thermal storage, such an important aspect of CST electricity, is not applicable to photothermal processes, but the photothermal product itself can be stored and transported for later downstream processing.

## Conclusions

The feasibility of a PWF collector for high-temperature photothermal materials processing has been demonstrated. The focal zone for processing stays at a small fixed height above ground level, although it must rotate about a vertical axis to follow the sun azimuthally. The design examined in this report delivers 2 MW at an average intensity of about 1.3 MW/m$^2$ to the focal zone, which could be increased by several means if required, including the use of a secondary concentrator. The design can be scaled and adjusted according to the requirements for sunlight intensity, uniformity and total power in the photothermal processing zone.

March 2026

## References


[1] Mehos, M., Turchi, C., Vidal, J., Wagner, M., Ma, Z., Ho, C., Kolb, W., Andraka, C., and Kruizenga, A., 2017. *Concentrating Solar Power Gen3 Demonstration Roadmap,* National Renewable Energy Laboratory, Golden, CO, Report No. NREL/TP-5500-67464.

[2] Processes, Materials and Solar Energy laboratory, PROMES-CNRS, *Solar Concentrators,* https://www.promes.cnrs.fr/en/infrastructure-solaire/moyens-solaires/solar-furnaces-and-concentrating-solar-systems/

[3] Beath, A. C., 2012. Industrial energy usage in Australia and the potential for implementation of solar thermal heat and power, *Energy* **43** 261–272. doi:10.1016/j.energy.2012.04.031

[4] Abuseada, M., Wei, C., Spearrin, R.M., and Fisher, T., 2022. Solar−Thermal Production of Graphitic Carbon and Hydrogen via Methane Decomposition, *Energy Fuels* **36** 3920−3928. doi.org/10.1021/acs.energyfuels.1c04405

[5] Benamar, A., Charpentier, L., Flamant, G., and Coppey, N., 2025. Recycling of Lithium-Ion Batteries by Solar Pyrometallurgy, *SolarPACES 2025,* Almeria, Spain. https://www.solarpaces.org/concentrated-solar-lithium-battery-recycling-demo-bests-fossil-fueled-recovery-rate/

[6] Bisset, D., 2017. Images formed by a Piecewise-Focusing solar collector, *Asia Pacific Solar Research Conference,* Melbourne

[7] Bisset, D., 2022. Piecewise-Focusing Collectors Reduce the Mirror Area in Concentrating Solar Thermal Power Plants, *ASME J. Sol. Energy Eng.,* **144**(5), 055001. doi.org/10.1115/1.4054027

[8] Bisset, D., 2024. Practical aspects of Piecewise-Focusing (PWF) collector design, *Asia Pacific Solar Research Conference,* Sydney

[9] Abuseada, M., and Fisher, T., 2026. Optical optimization of solar methane pyrolysis with secondary concentration, *Solar Energy* **307** 114334. doi.org/10.1016/j.solener.2026.114334

# APPENDIX

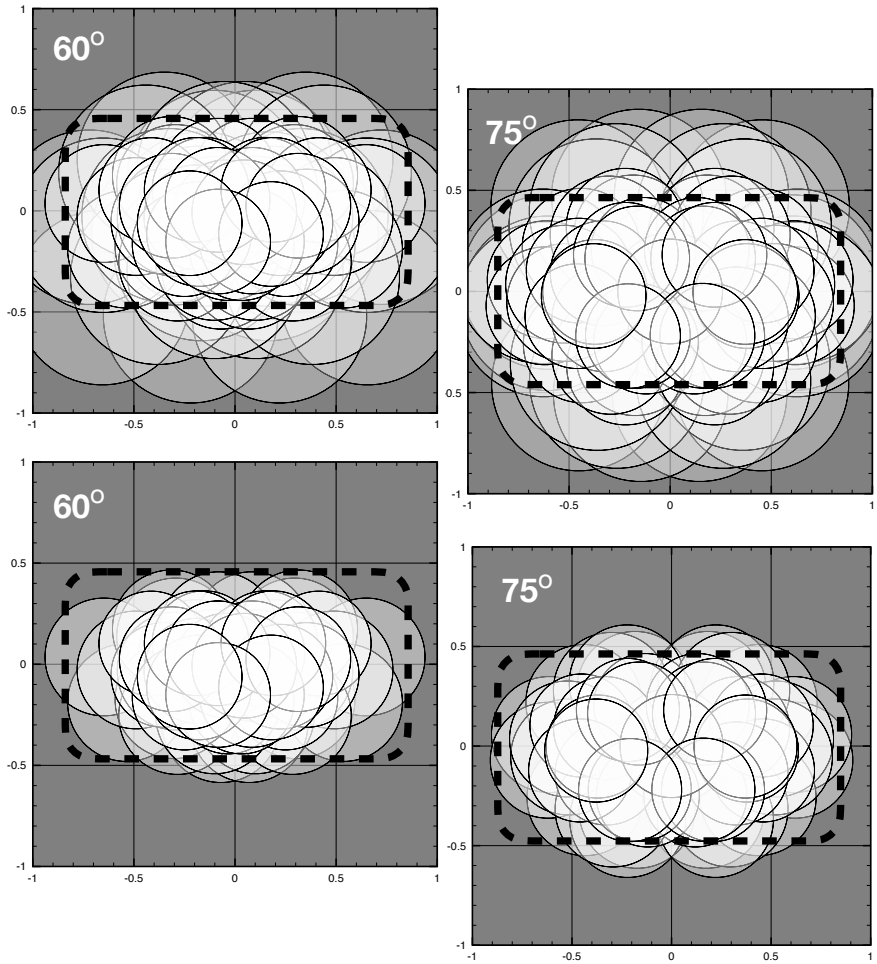


Figure A1. The effect of disabling the top row of reflectors (lower images) from the full set of reflectors (upper images, repeated from Figure 4) at the indicated sun elevations. This is one method of reducing the spillage occurring at higher elevations.

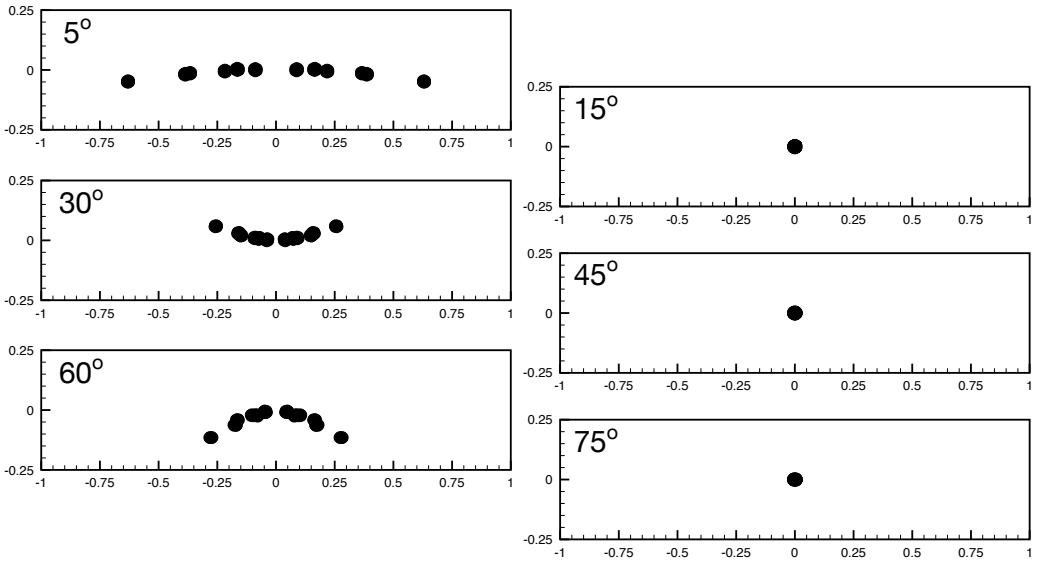


Figure A2. Reflections on the target from the centres of all reflectors at the indicated sun elevations, taking the sun as a point source. These are the same reflectors from Figures 2 and 4, except using radius 0.01 m and edges sloping inwards by 0.001 degrees. Perfect aim is achieved only at the three elevations used in setting the reflector mounting axes. More uniform results can be achieved by using different triples of elevations for setting the mounting axes of different reflectors.